WIRING DIAGRAM

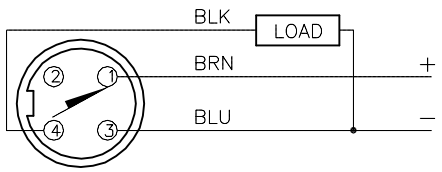

OUTPUT: RP6X

SHORT–CIRCUIT AND OVERLOAD PROTECTED

LOCKNUT LN–M18

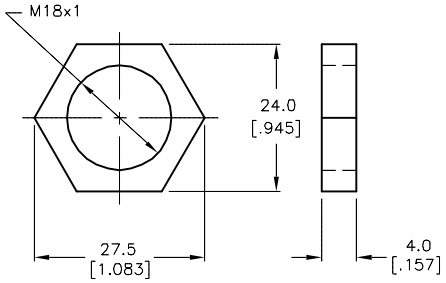

SPECIFICATIONS

RATED OPERATING DISTANCE	5mm [.197"]
MOUNTING MODE	FLUSH
HYSTERESIS	3–15%
MIN. REPEAT ACCURACY	≤ 2%
TEMPERATURE DRIFT	≤ ± 10%
OPERATING TEMPERATURE	–25°C to +70°C (–13°F to +158°F)
RATED OPERATIONAL VOLTAGE	10–30 VDC
RESIDUAL RIPPLE	≤ ± 10%
RATED OPERATIONAL CURRENT	≤ 200 mA
NO–LOAD CURRENT	≤ 15 mA
RESIDUAL CURRENT	≤ 0.1 mA
RATED INSULATION VOLTAGE	≤ 0.5 kV
SHORT–CIRCUIT PROTECTED	YES
MAX. VOLTAGE DROP	≤ 1.8 V
REVERSE POLARITY PROTECTION	INCORPORATED
WIRE–BREAK PROTECTION	INCORPORATED
OUTPUT FUNCTION	3–WIRE, NORMALLY CLOSED, PNP
MAX. SWITCHING FREQUENCY	≤ 0.5 kHz
HOUSING MATERIAL	METAL, BRASS, CHROME–PLATED
ACTIVE FACE	PLASTIC, PA12–GF20
END CAP MATERIAL	PLASTIC, EPTR
CONNECTION	7/8–16UN
SHOCK RESISTANCE	30 g, 11 ms
VIBRATION RESISTANCE	55 Hz, 1 mm AMPLITUDE (IN ALL 3 PLANES)
DEGREE OF PROTECTION	IP67
SWITCHING STATUS INDICATION	LED, YELLOW

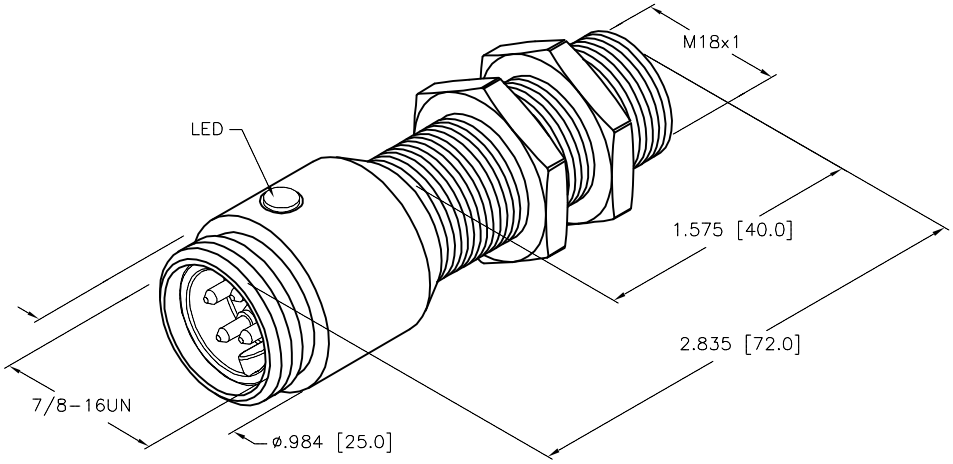

SOURCE DRAWING – FOR REFERENCE ONLY

REV	DESCRIPTION	BY	DATE	ECO NO.
D	UPDATE DESCRIPTION	RDS	06/20/19	500000000149

RELATED DOCUMENTS
1.
2.
3.
4.

3RD ANGLE PROJECTION

THIS DRAWING IS CONFIDENTIAL AND THE PROPERTY OF TURCK INC. USE OF THIS DOCUMENT WITHOUT WRITTEN PERMISSION IS PROHIBITED.

TURCK

3000 CAMPUS DRIVE
MINNEAPOLIS, MN 55441
1–800–544–7769
(763) 553–7300
(763) 553–0708 fax
www.turck.us

MATERIAL

FINISH

ALL DIMENSIONS DISPLAYED ON THIS DRAWING ARE FOR REFERENCE ONLY

CONTACT TURCK FOR MORE INFORMATION

DRFT SWC | DATE 9/13/94
APVD | SCALE 1=1.0

UNIT OF MEASUREMENT
INCH [MILLIMETER]
DO NOT SCALE THIS DRAWING

DESCRIPTION: BI5–G18–RP6X–B1343

IDENTIFICATION NO. 4641480 | REV D

FILE: 4641480 | SHEET 1 OF 1

Approved 06/20/2019, work order #193608 by A.F.